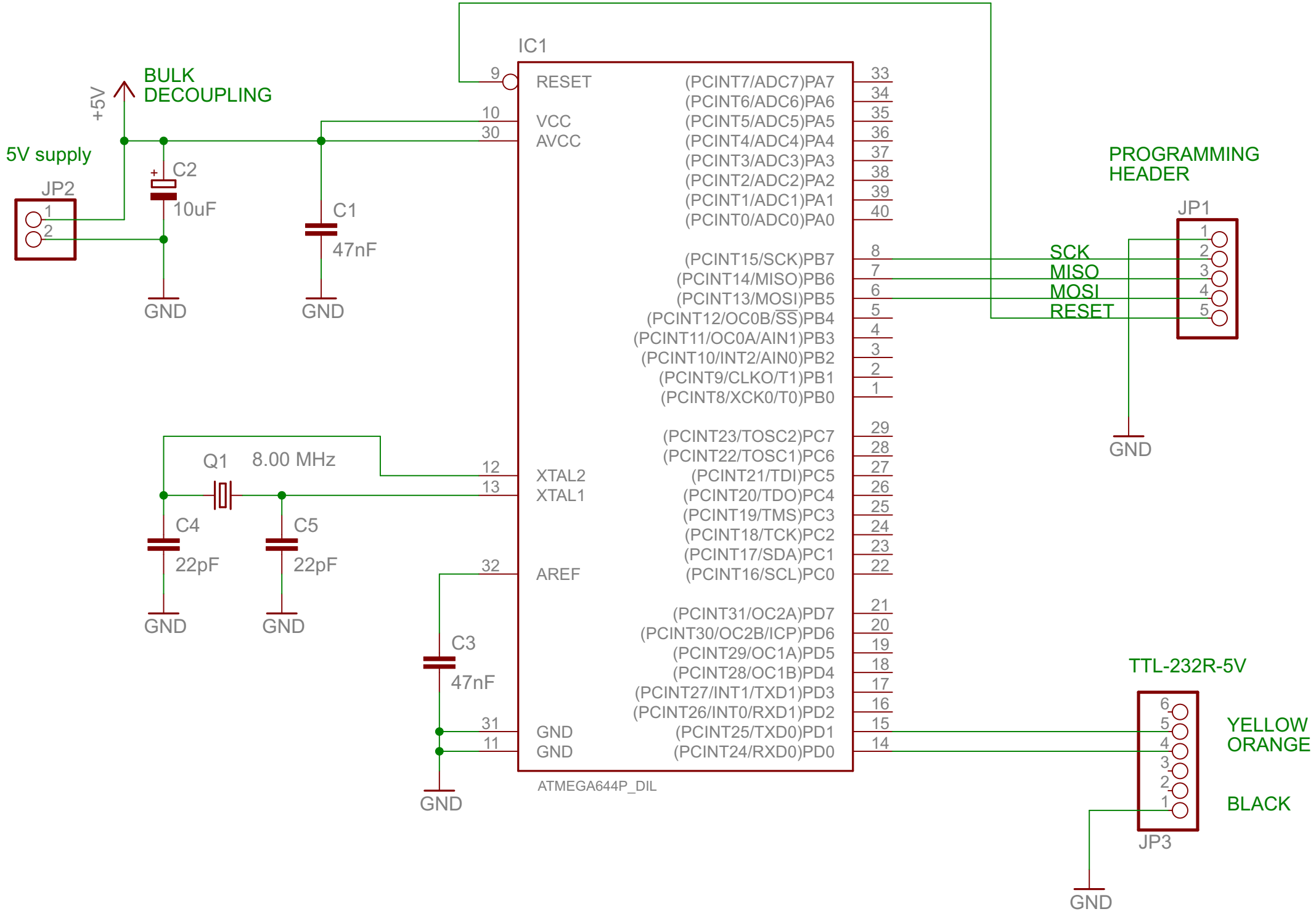

6/12/2012 11:14:44 AM f=1.66 C:\projects\acs_644\connect_serial.sch (Sheet: 1/1)